Technical
Safety Authority
of Saskatchewan

2202 – 2ND Ave
Regina, SK S4R 1K3
Canada
306-787-4531
elevatordesign@tsask.ca
www.tsask.ca

December 3, 2018

TO: All Class "A" Elevator Contractors

RE: Emergency Power/Firefighters' Emergency Service Testing

Due to regulation changes as of January 1, 2018, an updated acceptance checklist for emergency power/firefighters' emergency service operation tests is now posted on our website and is currently in effect.

The checklist will be utilized by our inspectors to confirm the requirements for all new installations including alterations to the extent of what is provided by the building in conformance to the National Building Code of Canada.

The check lists are based on the CSA 844-13 Code addition and some items have been amended by new code publications.

We will accept those items which have been updated to the new Code provisions.

Yours truly,

Robin Santos, Manager
Elevator and Amusement Ride Inspections
(306) 787-4531

Acceptance Checklist for Firefighters' Operation and Emergency Signaling Devices (Al?.1-2013 and 844-13): Automatic and Nonautomatic Elevators (14)

GENERAL NOTE: Pass = meets requirement; Fail = does not meet requirement; NA = not applicable.

ELEVATOR D Nb• _____ BUILDING• _____
ADDRESS: ---------- DATE: _____
INSPECTED BY: _____ INSPECTOR I.D. Nb• _____
SIGNATURE: ----------

Item	Check	A17.1-2013 and B44-13	Pass	Fail	NA
	Acceptance Test Checklist NOTE: The acceptance checklist is more detailed than the periodic inspection checklist will be. It is expected that the periodic inspection will be to confirm the operation has been maintained in working order, The purpose and intention of the checklist is to provide a mechanism for inspectors to be consistent when completing acceptance testing of elevators equipped with Firefighters' Emergency Operation. Where checkout procedures are required and are not currently addressed in A17.2, the person or firm installing or maintaining the equipment should provide a written checkout procedure.				
A.	Emergency Signaling Devices Ensure or verify the following:	2.27.1			
1	"PHONE" button in car station panel or adjacent to it.	2.27.1.1.3(b)			
2	"PHONE" button must have tactile (raised) phone symbol on or adjacent to it. Identiflcation of the button with the word "PHONE" is optional.	2.27.1.1.3(b), 2.26.12.1			
3	The "PHONE" button is no higher than 1 220 mm (48 in.) from floor.	2.27.1.1.3(a)			
4	Visual indication on the same panel as the "PHONE" push button illuminates when communication is established and extinguishes when communication is terminated.	2.27.1.1.3(c)			
5	Verify that the two-way communications is directed to a location staffed by authorized personnel and if the call is not acknowledged within 45 sec, it must be automatically directed to an alternate on- or off-site location. Automated answering systems are not acceptable.	2.27.1.1.2(a), 2.27.1.1.2(b), 2.27.1.1.3(h)			
6	Ensure that authorized personnel who answer call can identify location, elevator number, and that assistance is required.	2.27.1.1.3(d)			
7	Ensure that after call acknowledgement signals are sent, two-way voice communications are available between car and authorized personnel.	2.27.1.1.3(e)			
8	Ensure that call can only be terminated by authorized personnel outside the elevator or a timed termination occurs. A timed termination by the two-way communication means in the elevator, with the ability to extend the call by authorized personnel, is permitted if voice notification is sent a minimum of 3 min after communication has been established. Upon notification, authorized personnel have the ability to extend the call; automatic disconnection is permitted if the means to extend are not enacted within 20 s of the voice notification.	2.27.1.1.3(D			
9	Ensure that where rise is 18 m (60 ft) or more, two-way communication means from within the building to call into each individual car.	2.27.1.1.4			
10	Ensure that where the rise is 18 m (60 ft) or more, this communication means overrides any other communication to outside of building.	2.27.1.1.4(a)			
11	Ensuer that where rise is 18 m (60 ft) or more, communication can only be disconnected from outside the car within the building or a timed termination occurs. See Item 8 above.	2.27.1.1.4(b)			
12	Ensure that where the rise is 18 m (60 ft) or more, visual indicator illuminates when communication is established and extinguishes when call is terminated.	2.27.1.1.4(c)			

Acceptance Checklist for Firefighters' Operation and Emergency Signaling Devices (A17.1-2013 and B44-13): Automatic and Nonautomatic Elevators (Cont'd)

GENERAL NOTE: Pass = meets requirement; Fail = does not meet requirement; NA = not applicable.

Item	Check	A17.1-2013 and B44·13	Pass	Fail	NA
13	Ensure that where rise is 18 m (60 ft) or more, permanently posted and protected operating instructions are incorporated with or adjacent to the communication station outside the car [minimum letter height of 3 mm (0.125 in.)]. Verify that the instructions shall conform to 2.27.7.3.	2.27.1.1.4(d), 2.27.7.3			
14	Ensure audible alarms (where provided) and communications are functional with loss of normal power.	2.27.1.1.5			
15	Means to verify the two-way communication system provided is monitored at least daily. Verification of the communication means does not require activation of the two-way communication !inks,	2.27.1.1.6(a)			
16	If the verification means in 2.27.1.1.6(a) detects a failure in the telephone line or equivalent, an audible and illuminated visual signal is provided for each group of elevators controlled by a "FIRE RECALL" switch.	2.27.1.1.6(b)			
17	The visual signal is located at the designated landing in the vicinity of the "FIRE RECALL" switch and visible to elevator users.	2.27.1.1.6(b)(1)(a)			
1B	The visual signal is labeled "ELEVATOR COMMUNICATIONS FAILURE" in red letters of minimum 5 mm (0.25 in.) high.	2.27.1.1.6(b)(1) (b)			
19	The visual signal illuminates intermittently when activated.	2.27.1.1.6(b)(1) (c)			
20	The visual signal continues to illuminate intermittently until the telephone line or equivalent means is functional.	2.27.1.1.6(b) (I)(d)			
21	The audible signal is 10 dB above ambient but shall not exceed 80 dB measured at the designated landing "EMERGENCY RECALL" switch.	2.27.1.1.6(b)(2)(a)			
22	The audible signal sounds at least once every 30 sec with a minimum duration of half a second when activated.	2.27.1.1.6(b)(2) (b)			
2	The audible signal continues to sound until silenced by authorized personnel, or the telephone line or equivalent means is functional.	2.27.1.1.6(b)(2) (c)			
24	The means to silence the audible signal is accessible only to authorized personnel. The signal when silenced remains silent for a period of no less than 12 hr or unless activated by the next failed verification.	2.27.1.1.6(b)(3), 2.27.1.1.6(a)			
25	The verification means in 2.27.1.1.6(a) continues to monitor the operability of the telephone line or equivalent means while the telephone line or equivalent means is not functional on a continuous basis or periodically with intervals of not more than 5 min. When the verification means determines that the operability of the telephone line or equivalent means has been restored after being nonfunctional, the audible signal is silenced unless the signal has already been silenced in accordance with 2.27.1.1.6(b)(3) and the illuminated visual signal is extinguished.	2.27.1.1.6(b)(4)			
26	On freight elevators an audible signal must sound when emergency stop (2.26.2.5) is operated (2.27.1.2). If rise is over-30 m (100 ft), one audible device on each car individually and one at designated landing.	2.27.1.2(d)(1)(2)			
B.	Keys and Key Switches Ensure or verify the following:	2.27.8			
1	There is an FEO-Kl key for each Phase I, Phase II, and standby power selection switch in the building.	2.27.8			
2	An FEO-Kl key is used for Phase I and Phase II (firefighters' operation panel in car if it does not open automatically) and standby power for atl elevators in the building.	2.27.B			

Acceptance Checklist for Firefighters' Operation and Emergency Signaling Devices (A17.1-2013 and B44-13): Automatic and Nonautomatic Elevators (Cont'd}

GENERAL NOTE: Pass = meets requirement; Fail = does not meet requirement; NA = not applicable.

Item	Check	Al?.1-2013 and 844-13	Pass	Fail	NA
3	Keys are available only to elevator, emergency, and authorized personnel.	2.27.8			
4	The keys shall be Group 3 security (see 8.1).	2.27.8			
C.	Phase I Key Switch and Instructions Verify that:	12.27.3_1/2.27_7/ 2.27.B]			
1	Operating instructions shall be incorporated with or adjacent to fire recall switch, only wording identified in 2.27.7.1 is acceptable.				
2	Labeled "FIRE RECALL," marked "RESET," "OFF," and "ON" in that order with the "OFF" position in the center position. "FIRE RECALL" letters are a minimum of 5 mm (0,25 in.) high. Text is either red on a background that contrasts with red, or a color that contrasts with red on a red background.	2.27.3.1.l(b)			
3	Provided at designated level for group.	2.27.3.1.i(a)			
4	Located in the lobby, within sight of the elevators for that group, and readily accessible,	2.27.3.1.l(c)			
5	The key cannot be removed in the "RESEr' position, but can be removed in the other positions.	2.27.3.1.3			
6	The position of any recall switch can only be changed by turning the key deliberately. (Switch is not spring loaded.)	2.27.3.1.1			
7	Second switch, if present, must be at the building fire command center labeled "FIRE RECALL," only be two-position switch marked "OFP' and "ON" in that order.	2.27.3.1.2			
8	In jurisdictions enforcing NBCC: a symbol showing a red fire hat on a contrasting background a minimum 50 mm (2 in.) in height shalt be located on "FIREFIGHTER'S ELEVATOR" entrance frame or adjacent to it at recall level.	2.27.7.4, 2.27.3.1.6(h)			

Acceptance Checklist for Firefighters' Operation and Emergency Signaling Devices (Al?.1-2013 and B44-13): Automatic and Nonautomatic Elevators (Cont'd)

GENERAL NOTE: Pass = meets requirement; Fail = does not meet requirement; NA = not applicable.

Item	Check	A17.1-2013 and B44·13	Pass	Fail	NA
9	When required by building code, the sign shown below shall be posted next to halt call fixtures. (NOTE: Fire Service Access Elevators are not permitted to have this pictograph.) (IBC 3007) 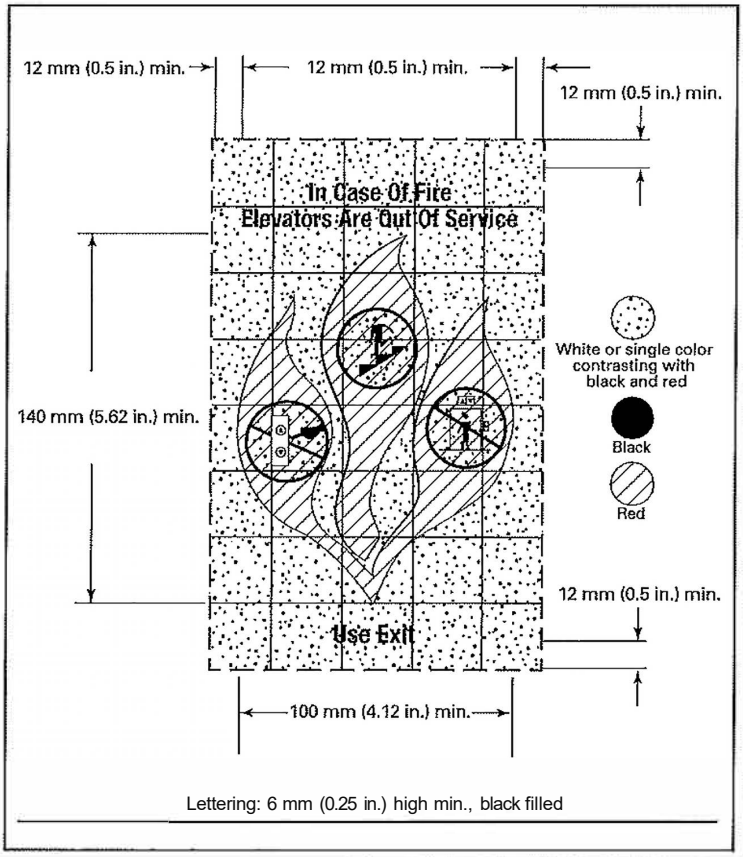 	2.27.9			
D.	Phase I Operation While Running Place several floor calls in the car. While traveling away from the recall level, have a person at the designated level place the three-position Phase I recall switch in the "ON" position. Where a remote switch is provided, ensure that the three-position Phase I recall switch is in the "OFP' position, and use the same procedure with a person at the two-position remote Phase I switch. Determine the following:	2.27.3			
1	The car stops and reverses without opening the doors.	2.27.3.1.6(b)			
2	The in-car stop switch (2.26.2.21) or emergency stop switch (2.26.2.5) is inoperative.	2.27.3.1.6(c)			
3	Jh car, floor selection means are rendered inoperative.	2.27.3.1.6(f)(1)(a)			
4	h car, call register lights and car lanterns are extinguished and inoperative.	2.27.3.1.6(f)(1)(b)			
5	h the car, position indicators and car direction indicators, where provided, remain operative.	2.27.3.1.6(f)(1)(c)			
6	At the building fire command center, the position indicators and car direction indicators, where provided, remain operative.	2.27.3.1.6(f)(2)(a)			

Acceptance Checklist for Firefighters' Operation and Emergency Signaling Devices (Al?.1-2013 and B44-13): Automatic and Nonautomatic Elevators (Cont'd)

GENERAL NOTE: Pass = meets requirement; Fail = does not meet requirement; NA = not applicable.

Item	Check	Al?.1-2013 and B44-13	Pass	Fail	NA
7	At the designated level, hall call registered lights and hall lanterns, where provided, are extinguished and remain inoperative.	2.27.3.1.6(0(3) (a)			
8	At the designated level, position indicators and car-direction indicators, where provided, are operative.	2.27.3.1.6(0(3)(b)			
9	At all landings, except the designated level hall, call registered lights and hall lanterns, where provided, are extinguished and remain inoperative.	2.27.3.1.6(0(4)(a)			
10	At all landings, except the designated level, position indicators and car-direction indicators, where provided, are extinguished and remain inoperative.	2.27.3.1.6(0(4)(b)			
11	All car door open button(s) are rendered inoperative as soon as car motion begins.	2.27.3.1.6(0			
12	When car stops to reverse direction, door open button(s) will not open doors.	2.27.3.1.6(i)			
13	The car returns to the designated level and parks with power-operated doors open. Where more than one entrance can be opened at the designated level only the door serving the lobby where the "FIRE RECALL" switch is located will open automatically. In-car door open button(s) remain operative and any other door is opened by means of the door open button. The door must initiate reclosing within 15 s of reaching the door open position.	2.27.3.1.6(a)			
14	The visual and audible signals operate. Audible signal stays on for at least 5 sec after doors close, and visual signal stays on until car is restored to automatic operation.	2.27.3.1.6(h)			
15	Where an auxiliary power supply, other than emergency or standby power, or normal power is provided and not capable of moving the car to the recall level, then *(a)* the visual signal extinguishes *(b)* if car is not at a landing, it moves to closest landing that it is capable of reaching *(c)* power-operated horizontally or vertically sliding doors with automatic closing, open and then initiate closing within 15 sec *(d)* door open button remains operative *(e)* car does not move until normal, emergency, or standby power supply becomes available	2.27.3.1.6(n)			
16	In-car FEO panel cover opens automatically when at recall level (if automatic unlocking is provided).	2.27.3.3.7			
E.	Phase I Operation With Doors Open Place the Phase I switch to the "OFP' position, and run the car to any floor. With the doors open, have the Phase I switch turned to the "ON" position, and check the following:	2.27.3.1.6			
1	Door-reopening devices sensitive to smoke or flame are inoperative immediately.	2.27.3.1.6(e)			
2	!f door-reopening devices are rendered inoperative, the dosing speed is reduced so that the kinetic energy is reduced to 2½ -lb (3.5 J). (To verify closing time, refer to data plate required by 2.13.4.2.4.)	2.27.3.1.6(e)			
3	The emergency stop switch (2.26.2.5) or in-car stop switch (2.26.2.21) is rendered inoperative as soon as the car *moves* away from the landing.	2.27.3.1.6(c)			
4	The in-car door open button(s) is rendered inoperative as soon as the car moves away from the landing.	2.27.3.1.6(i)			

Acceptance Checklist for Firefighters' Operation and Emergency Signaling Devices (A17.1-2013 and B44-13): Automatic and Nonautomatic Elevators (Cont'd)

GENERAL NOTE: Pass = meets requirement; Fail = does not meet requirement; NA = not applicable.

Item	Check	A17.1-2013 and B44-13	Pass	Fail	NA
F.	Emergency Stop Switch and/or In-Car Stop Switch and Doors Closing Place the Phase I switch to the "OFF" position, and run the car to any Floor. Activate the emergency stop switch (2.26.2.5) or the in-car stop switch (2.26.2.21). With the doors open, have the Phase I switch turned to the "ON" position.				
1	Verify that the doors do not close.				
2	Return the emergency stop switch or in-car stop switch to the run position, and verify that the doors close promptly and the car moves to the designated level.	2.27.3.1.6(d)			
G.	Stop Switches and Door Buttons While on Phase I, verify the following:	[2.27.3.1.6(c)/ 2.27.3.3.3.l(m)/ 2.27.3.1.6(g)]			
1	In-car keyed (2.26.2.21) and emergency stop (2.26.2.5) switches in the car shall remain inoperative. All other stop switches, including the stop switch (2.26.2.33) in the firefighters' operation panel, shall remain operative.	2.27.3.1.6(c)			
2	For vertical sliding door, the corridor door open and door close buttons remain operative.	2.27.3.1.6(g)			
H.	Fire Alarm-Initiating Device and Operation	2.27.3			
1	In jurisdictions not enforcing the NBCC: verify that there is a smoke detector or other automatic fire detector in environments not suitable for smoke detectors (fire alarm-initiating device) at each elevator lobby served by the elevator, associated machine room, machinery space containing a motor controller or electric driving machine, control space, or control room and in the hoistway if sprinklers are installed in the hoistway or NOTE: It should be noted that the IBC requires that when "any" FAID in the building is activated, Fire Service ccess Elevators will recall. Currently, A17.1/B44 does not recognize this in 2.27.3. (See 2.27.3.1.4.) In jurisdictions enforcing the NBCC: verify that smoke detectors, or heat detectors in environments not suitable for smoke detectors (fire alarm-initiating devices), used to initiate Phase I emergency recall operation are installed at each elevator lobby served by the elevator, in the associated elevator machine room, machinery space containing a motor controller or electric driving machine, control space, or control room and in the hoistway, when sprinklers are located in the hoistway. NOTE (2.27.3.2.2): Smoke and heat detectors (fire alarm-initiating devices) are referred to as fire detectors in the NBCC. Pull stations are not deeemed to be fire detectors.	[2.27.3.2.1/ 2.27.3.2.2]			
2	For Acceptance Test: With the car(s) on normal, have the fire alarm-initiating device for designated level recall activated, and verify that the elevator commences Phase I operation and an cars return to the designated level. For Periodic Test: With the car(s) on normal, have the input for designated level recall activated, and verify that the elevator commences Phase I operation and all cars return to the designated level.	2.27.3.2.3			
3	To reset operation initiated from fire alarm system, the fire alarm signal must be reset, then the Phase I switch must be cycled to "RESET" momentarily, then to "OFF."	2.27.3.1.6(k)			

Acceptance Checklist for Firefighters' Operation and Emergency Signaling Devices (A17.1-2013 and B44-13): Automatic and Nonautomatic Elevators (Cont'd)

GENERAL NOTE: Pass = meets requirement; Fail = does not meet requirement; NA = not applicable.

Item	Check	A17.1-2013 and B44-13	Pass	Fall	NA
4	For Acceptance Test: With the car(s) on normal, have the fire alarm-initiating device for alternate level recall activated, and verify that the elevator commences Phase I operation and all cars return to the alternate level. For Periodic Test: With the car(s) on normal, have the input for alternate level recall activated, and verify that the elevator commences Phase I operation and all cars return to the alternate level.	2.27.3.2.4			
5	Ensure that the recall !eve! is determined by the first activated fire alarm-initiaing device for that group. If the car(s) is recalled to the designated level by the "FIRE RECALL" switch(es), the recall level must remain the designated level.	2.27.3.2.5			
6	For Acceptance Test: Activate the machine room fire alarm-initiating device input, and verify Phase I and all cars return to the designated level unless the machine room is at the designated level, then return the elevator to the alternate level. For Periodic Level: Activate the machine room fire alarm-initiating device input, and verify Phase I and all cars return to the designated level unless the machine room is at the designated level, then return the elevator to the alternate level.	2.27.3.2.3(b)			
7	For Acceptance Test: With the car(s) on normal, have the input for machine room, machinery space containing a motor controller or driving machine, control room, control space, or hoistway fire alarm-initiating device activated, and verify that both the visual signals in the car illuminate intermittently. For Periodic Test: With the car(s) on normal, have the input for machine room, machinery space containing a motor controller or driving machine, control room, control space, or hoistway fire alarm-initiating device activated, and verify that both the visual signals in the car illuminate intermittently.	2.27.3.2.6			
8	For Acceptance Test: Have the fire alarm-initiating device in the hoistway, if present, activated, and verify that all cars return to the designated landing, except that FAIDs installed at or below the lowest landing of recall causes the cars to return to the upper recall level. For Periodic Test: Have the input for the fire alarm-initiating device in the hoistway, if present, activated, and verify that all cars return to the designated landing, except that FAIDs installed at or below the lowest landing of recall causes the cars to return to the upper recall level.	2.27.3.2.3(c)			
9	Ensure that in jurisdictions not enforcing the NBCC, listed relay(s) or other listed appliance(s) as specified in the NFPA 72 for connection to the fire alarm system are provided and installed in compliance with the NFPA 72, used to initiate Phase I Emergency Recall Operation and are located outside of any room or space requiring Group 1 Security.	2.27.3.2.7			
I.	Alternate Recall Level With the car returned to the alternate level by the fire alarm-initiating device at the designated level and the doors open.				
1	If a two-position key switch is provided at the building fire command center, place it in the "ON" position, and verify that the elevator remains at the alternate landing.	2.27.3.1.2, 2.27.3.1.60)			

Acceptance Checklist for Firefighters' Operation and Emergency Signaling Devices (Al?.1·2013 and 844·13): Automatic and Nonautomatic Elevators (Cont'd)

GENERAL NOTE: Pass = meets requirement; Fail = does not meet requirement; NA = not applicable.

Item	Check	A17.1-2013 and 844-13	Pass	Fail	NA
2	Turn both the Phase I switch and the additional Phase I switch at the building fire command center (when provided) to the "ON" position, and verify that the car returns to the designated !eve!.	2.27.3.1.6(j)			
3	Ensure that the elevator(s) remain at the designated level if The Phase I key switch is turned to "OFF" position from the "ON" position or The Phase I key switch is turned to "RESET" or The additional Phase I key switch at the building fire command center is turned to the "OFP' position (if provided), regardless of the state of the flre alarm signal.	2.27.3.2.5			
4	To reset operation initiated from fire alarm system, the fire alarm signal must be reset. The additional Phase I switch at the building fire command center (when provided) must be turned to "OFF," then the three-position Phase I switch must be cycled to "RESET" momentarily, then to "OFF."	2.27.3.1.6(k)			
).	Phase Il In-Car Switch and Instruction	[2.27.8/2.27.3.3]			
1	Check that instructions are incorporated with or adjacent to the switch and visible only when the cover is open.	2.27.7.2			

FIRE OPERATION

When	flashing, exit elevator
To operate car	Insert fire key, and turn to "ON" Enter floor selection
To cancel floor selection	Press "CALL CANCEL" button
To close door	Press and hold "CLOSE" button
To open door	Press and hold "OPEN" button
To hold car at floor	With doors open, turn key to "HOLD"
For emergency stop	Use "STOP" switch
To automatically return to recall floor	Turn key to "OFF"

For manually operated doors, "PUSH DOOR" or "PULL DOOR UP" may be included in the instructions above, and also special instructions as necessary for verti-cal\y sliding doors are also allowed.

Acceptance Checklist for Firefighters' Operation and Emergency Signaling Devices (A17.1-2013 and B44-13): Automatic and Nonautomatic Elevators (Cont'd)

GENERAL NOTE: Pass = meets requirement; Fail = does not meet requirement; NA = not applicable.

Item	Check	A17.1-2013 and 844-13	Pass	Fail	NA
2	FEO panel *(a)* The panel is located at the top of the operating station with buttons and switches more than 1 220 mm {48 in.) above the floor and less than 1 830 mm {72 in.) above the floor. *(b)* The panel is on the same vertical centerline as a floor selection means that provides access to all floors served by the elevator. *(c)* The panel and the floor selection means is located on the wall of the car containing the door that opens to the lobby where the "FIRE RECALL" switch is located or immediately adjacent to that wall on a side wall. *(d)* The panel cover is marked "FIREFIGHTER'S OPERATION" in red letters at least 10 mm (0.4 in.) high. *(e)* The panel key (where panel doesn't unlock automatically) is same as Phase ! and ll keys. *(f)* The panel key is rotated clockwise to allow the panel to be opened. (g) When open, the cover does not restrict access to the buttons or switches or the view of the instructions. *(h)* The panel cannot be closed with the key in the Phase ll operation switch. (D The panel is self-locking. OJ The following switches and buttons are provided and laid out as below: 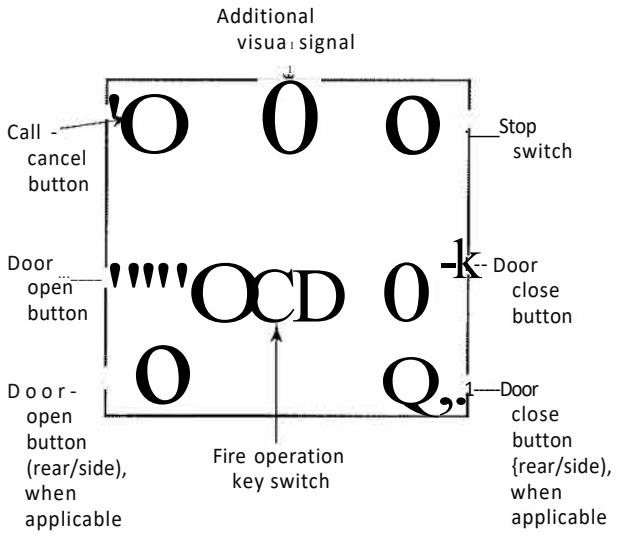 GENERAL NOTES: (a) Switches and buttons show only the location, not the labeling. (b) Not to scale.	2.27.3.3.7			
3	The key can only be removed in the "OFP' and "HOLD" positions.	2.27.3.3			
4	The key switch is labeled "FIRE OPERATION" [minimum 5 mm (0.25 in.) high lettering] marked "OFF," "HOLD," and "ON" in that order. Ensure that the text on the label for the "FIRE OPERATION" lettering is either red on a background that contrasts with red, or a color that contrasts with red on a red background.	2.27.3.3			
5	Additional visual signal provided behind the panel.	2.27.3.3.8			

Acceptance Checklist for Firefighters' Operation and Emergency Signaling Devices (Al?.1-2013 and B44-13): Automatic and Nonautomatic Elevators (Cont'd)

GENERAL NOTE: Pass = meets requirement; Fail = does not meet requirement; NA = not applicable.

Item	Check	A17.1-2013 and 844-13	Pass	Fait	NA
6	The "DOOR OPEN," "DOOR CLOSE," and "CALL CANCEL" buttons are at least 19 mm (0.75 in.) at the smallest dimension and are labeled. (Symbols are not acceptable.) Buttons labeled "REAR DOOR CLOSE" and "REAR DOOR OPEN" are provided if a rear entrance is provided. Buttons labeled "SIDE DOOR CLOSE" and "SIDE DOOR OPEN" are provided if a side entrance is provided.	2,27.3.3.l(c), 2.27.3.3.7			
K.	Monthly Test (For Jurisdictions Not Enforcing the NBCC) Not required for acceptance test	8.6.10.1			
	Monthly test log is completed.				
L.	Phase II Operation With Phase I activated and the car at the designated or alternate landing, place the Phase II key switch in the "ON" position. Operate the car, and check the following:	2.27.3.3.1			
1	The elevator can be operated only from the car buttons and will not respond to corridor calls.	2.27.3.3.l(a)			
2	Alt corridor call buttons, door open and close buttons, and directional lanterns are inoperative. Car position indicators and position indicators at the designated landing and fire control station are operative, landing position indicators inoperative at all other landings and locations.	2.27.3.3.l(b), (g)			
3	Open doors can be closed only by continuous pressure means. If the means is released before the door is fully closed, horizontal sliding doors will reopen, and vertical sliding doors will stop, or stop and reopen.	2.27.3.3.l(e)			
4	The door can only be opened by continuous pressure on the door open button, and if released before the doors are in the normal open position, the door will close without delay.	2.27.3.3.l(d)			
5	If more than one entrance can be opened and closed at the same landing, separate door open and close buttons are provided in the firefighters' operation panel for each entrance.	2.27.3.3.l(d), 2.27.3.3.7			
6	All door-reopening devices are inoperative - (except the DOB): Full-speed closing shat\ be permitted.	2.27.3.3.l(g)			
7	Call cancel button is labeled and when activated, wiU cancel alt calls and cause the car to stop at or before the next available landing.	2.27.3.3.l(h)			
8	Floor selection means are provided and functional for all landings without restrictions, or floor selection means for all floors are provided behind the firefighters' operation panel, and the buttons are at least 19 mm (0.75 In.) in their smallest dimension.	2.27.3.3.l(i)			
9	Moving car will stop at the next landing with a car call registered and remaining car calls canceled.	2.27.3.3.10)			
10	A stop switch provided behind firefighters' operation panel. Switch is red, manually opened and dosed type, marked "STOP," with stop and run positions marked as welt. If the switch is of a button type, its smallest dimension is 19 mm. (Any type switch [s acceptable, as long as a firefighter wearing protective gloves can operate it.)	2.26.2.33, 2.27.3.3.l(m)			
11	Operation of the stop switch in the firefighters' operation panel cancels all calls and stops the car. After the stop switch in the firefighters' operation panel is restored to the run position, the car does not move except for leveling operation, until a car call is registered.	2.27.3.3.l(m)			

Acceptance Checklist for Firefighters' Operation and Emergency Signaling Devices (A17.1-2013 and B44-13): Automatic and Nonautomatic Elevators (Cont'd)

GENERAL NOTE: Pass = meets requirement; Fail = does not meet requirement; NA = not applicable.

Item	Check	A17.1-2013 and B44,13	Pass	Fail	NA
12	If an auxiliary power supply, other than emergency or standby power, or normal power is provided and not capable of moving the car to all landings, then (a) the visual signal extinguishes (b) if car is not at a landing, it moves to closest landing that it is capable of reaching (c) power-operated horizontally or vertically sliding doors with automatic c\os-ing, open and then initiate closing within 15 sec (d) door open button remains operative (e) car does not move until normal, emergency, or standby power supply becomes available	2.27.3.1.6(n)			
M.	Phase II Switch in "HOLD" Position With Doors Open	2.27.3.3.2			
1	Place the Phase I switch in the "HOLD" position, and remove key. Verify that the car remains at the landing and the door close button is inoperative.	2.27.3.3.2			
2	Verify that the car call means are inoperative.	2.27.3.3.2			
3	If the elevator is equipped with manually operated doors, with key in "HOLD" position, car calls cannot be registered, and car will not move.	2.27.3.3.2			
4	If the normal power supply, emergency power supply, and standby power are not available and the elevator is equipped with an alternate source of power, and the "FIRE OPERATION" switch in teh rnr is in the "HOLD" position, the visual sig, nal [2,27.3.1.6(h)J illuminates intermittently.	2.27.3.3.2			
N.	Phase II Switch h "OFF" Position and Doors Closing Horizontal Sliding Doors With the elevator away from the recall level, Phase I in effect, place the Phase I switch in the "OFP' position, and verify the following:	2.27.3.3			
1	Doors close automatically.	2.27.3.3.3(a)			
2	Car reverts to a Phase I type return on completion of door closing and reverts to Phase ! when the doors open at the designated landing.	2.27.3.3.3(a)			
3	Door-reopening device inoperative, and full-speed closing permitted.	2.27.3.3.3(a)			
4	Door open button remains operative.	2.27.3.3.3(a)			
5	If Phase II switch turned to "ON" or "HOLD" before door is closed, the doors will reopen.	2.27.3.3.3(a)			
6	With the car stopped and doors closed, or in motion and Phase ! switch is turned to "OFP' position, car returns to recall \eve! in conformance with 2.27.3.1.6(a) through (n).				

Acceptance Checklist for Firefighters' Operation and Emergency Signaling Devices (Al?.1-2013 and B44-13): Automatic and Nonautomatic Elevators (Cont'd)

GENERAL NOTE: Pass = meets requirement; Fail = does not meet requirement; NA = not applicable.

Item	Check	A17.1-2013 and B44-13	Pass	Fail	NA
Q.	Removal From Phase Ll	2.27.3.3			
1	With doors closed and Phase Ll switch turned to "OFP' position, car returns to recall level (designated or alternate as originally recalled to). If the normal power supply, emergency power supply, and standby power supply are not available and the elevator is equipped with an alternate source of power that can move the car to a floor, and the "FIRE OPERATION" switch in the car is in the "OFP' position, verify the following: *(a)* the visual signal illuminates intermittently *(b)* the doors open and initiate closing within 15 s *(c)* the door open button remains operative *(d)* the car remains stopped until power is restored	2.27.3.3.4			
2	The elevator can only be removed from Phase Ll when it is at the designated level, and doors are open with Phase Ll switch in the "OFF" position.	2.27.3.3.5			
P.	Power Disconnects Open Ensure or verify the following:	2.27.3.4			
1	With the elevator on Phase I, have the mainline power interrupted and restored to verify that the elevator will remain on Phase I. Elevator is permitted to re-establish its position by moving to the next floor in the direction of the recall level.	2.27.3.4(a)			
2	With the elevator on Phase Ll, have the mainline power interrupted and restored to verify that the elevator will remain on Phase Ll.	2.27.3.4			
3	Upon restoration of power, an elevator on Phase Ll with the key in the "OFP' position is permitted to re-establish its position only by moving to the next floor in the direction of the recall level.	2.27.3.4(b)			
4	Upon restoration of power, an elevator on Phase Ll with the key in the "HOLD" position does not move, except within a leveling zone. If doors are not fully closed and the car is in a leveling zone, they open.	2.27.3.4(d)			
5	Upon restoration of power, an elevator on Phase Ll with the key in the "ON" position does not move, except within a leveling zone, until a car call is entered. Doors will only move with constant pressure operation of a door open or closed button.	2.27.3.4(d)			
6	Upon restoration of power, an elevator on Phase Ll with the key in the "ON" position is permitted to re-establish its position only by moving to the next floor in the direction of the recall level and only after a car call is registered.	2.27.3.4(d)			
Q.	Inspection and Hoistway Access Operation While operating from top of car, have the Phase I key switch placed in the "ON" position, and verify the following:	2.27.6			
1	An audible signal sounds.				
2	The elevator remains under control of car top, in-car, pit (if provided), access, machine room, or any other inspection operating device.				

Acceptance Checklist for Firefighters' Operation and Emergency Signaling Devices (AI?.1-2013 and B44-13): Automatic and Nonautomatic Elevators (Cont'd)

GENERAL NOTE: Pass = meets requirement; Fail = does not meet requirement; NA = not applicable.

Item	Check	AI?.1-2013 and B44·13	Pass	Fail	NA
3	The hoistway access switch remains functional.				
R.	Automatic Elevators With Attendant Operation With elevator on attendant operation, stop at a floor and have the Phase I switch placed in the "ON" position. Verify the following:	2.27.5.2			
1	The audible and visual signal operates and that a parked elevator not at the designated level will automatically go on Phase I after a time delay between 10 sec and 30 sec.	2.27.5.2(a)			
2	If car is at the designated level, Phase I is active without delay.	2.27.5.2(a)			
3	A moving car on attendant operation will commence Phase I operation without delay.	2.27.5.2(b)			
4	If car is on hospital emergency service, it will remain on that operation until removed by the operator and at that point revert to Phase I operation. The audible and visual signals in the car shall be activated immediately. It is permitted to provide a means in the car to manually silence the audible signal 5 sec after its activation. The audible signal is reactivated when the doors open.	2.27.5.3			
5	When the elevator(s) are on Phase I or Phase II, they cannot be put into hospital service.	2.27.5.3			
S.	Elevators on Phases I and II Prevention of Operation and Disabling Not Allowed Testing to demonstrate that security operations, load weighing, and landing side wiring problems will not disable the elevator.				
1	Activate means other than those specified in this Code to remove elevators from normal operation (card key access, etc.), and verify that Phase I emergency recall operation is not prevented and all floors served by the elevator are accessible during Phase II operation.	2.27.3.1.6G)			
2	Activate input for devices that measure loads, and verify that the elevator is not prevented from operating at or below the capacity that is required in 2.16.	2.27.3.1.6(m)			
3	Verify that an accidental ground or short circuit in equipment on landing side will not disable Phase ti operation. It is suggested that the company performing the test provide a written procedure for this test in order to prevent potential damage to the equipment.	2.27.3.3.6			
T.	Hydraulic Elevators				
1	Where the car(s) is responding to low oil protection, plunger follower guide protection, auxiliary power lowering, or oil tank temperature shutdown and Phase I activated, verify the car returns to the recall level. If the car is incapable of reaching the recall level, then it descends to an available landing, opens doors, and redoses within 15 sec, and the door open button remains operative. The visual signal extinguishes.	3.27.1			
2	While on Phase I recall operation, verify that when low oil protection, plunger follower guide protection, auxiliary power lowering, or oil tank temperature shutdown is activated with the car above the recall level, the car will return to the recall level, and where the car is below the recall level, it descends to an available landing, opens doors, and redoses within 15 sec, and the door open button remains operative. The visual signal extinguishes.	3.27.2			

Acceptance Checklist for Firefighters' Operation and Emergency Signaling Devices (A17.1-2013 and B44-13): Automatic and Nonautomatic Elevators (Cont'd)

GENERAL NOTE: Pass = meets requirement; Fail = does not meet requirement; NA = not applicable.

Item	Check	A17.1-2013 and B44·13	Pass	Fail	NA
3	While on Phase I recall operation at the recall level, verify that when low oil protection, plunger follower guide protection, auxiliary power lowering, or oil tank temperature shutdown is activated, the doors close within 15 sec, the door open button(s) remain operative, and the visual signal illuminates intermittently.	3.27.3			
4	With the car(s) on Phase II operation, verify that when low oil protection, plunger follower guide protection, auxiliary power lowering, or oil tank temperature shutdown is activated, traveling car(s) stop, cancels al! calls, and the visual signal in the car illuminates intermittently, and the car can accept calls only to landings below its location in compliance with Phase II emergency in-car operation.	3.27.4			
U.	Multicompartment Elevators For multicompartment elevators, verify the following:				
1	Recall switch is at the designated level that the upper compartment serves,	2,27.3.5.1			
2	Upper compartment also houses the firefighters' panel. Behind the panel, an additional two-position switch labeled "LOWER CAR LOCKOUT," with "OFP' and "ON" positions marked.	2.27.3.5.2, 2.27.3.5.4			
3	There is a means to display the entire floor area of the lower compartment. In the upper compartment, the display is activated only when Phase I or Phase II is in effect.	2.27.3.S.3			
4	The "LOWER CAR LOCKOUT' switch is not functional unless Phase I! is in effect.	2.27.3.5.4(a)			
5	Placing the "LOWER CAR LOCKOUT" switch in the "ON" position initiates closing of the lower compartment doors with reduced kinetic energy and disables all door-reopening devices in the tower compartment.	2.27.3.5.4(b)			
6	Placing the "LOWER CAR LOCKOUT' switch in the "OFP' position with the car at a landing opens the lower compartment doors.	2.27.3.5.4(c)			
V.	Elevators in Seismic Zone 2 and Higher (Does Not Apply To Hydraulic Elevators) Activate the seismic switch while the car(s) are on Phase I and again while they are on Phase II.				
1	When the seismic switch is activated when the car(s) are on Phase I, they shalt move to the nearest available landing, open their doors, and shut down. If the car(s) are on Phase II, the same operation applies, However, the door operation conforms to 2.27.3.3.				
2	When the counterweight displacement switch is activated when the car(s) are on Phase I, they initiate an emergency stop and then move away from the counterweight at a speed of not more than 0.75 m/s (150 fpm) and stop at the nearest available floor, open their doors, and shut down. !f the car(s) are on Phase II, the same operation applies. However, ensure the door operation conforms to 2.27.3.3.				
3	Elevators standing at a floor when a seismic operation is initiated remains at the floor and opens its doors. If the car(s) are on Phase II, door operation conforms to 2.27.3.3.				
4	If a seismic operation is initiated prior to Phase I or Phase !I, the car(s) cannot be operated by the Phase I or Phase II key switches.				
5	Resetting seismic operation results in car(s) returning to their prior mode of operation.				

Acceptance Checklist for Firefighters' Operation and Emergency Signaling Devices (A17.1-2013 and B44-13): Automatic and Nonautomatic Elevators (Cont'd)

GENERAL NOTE: Pass = meets requirement; Fail = does not meet requirement; NA = not applicable.

Item	Check	A17.1-2013 and 844-13	Pass	Fail	NA
W.	Additional Requirements for Nonautomatic Elevators Check for additional features required for nonautomatic elevators having firefighters' emergency operation. Verify the following:				
1	When a fire recaU switch is on, ensure that the visual signal in the car displays "FIRE RECALL - RETURN TO _____." [Insert level to which the car should be returned (designated or alternate level).] The audible and visual signals shall be activated as long as Phase I emergency recall is in effect.	2.27.4.1			
2	Where an additional fire recal! switch is provided, it does not affect the visual signal if the designated level fire alarm-initiating device has been activated.	2.27.4.1			
3	For elevators with manually operated doors, the instructions (2.27.7.2) for opening and dosing the doors is permitted to be replaced with short phrases, such as "PUSH DOOR" or "PULL DOOR UP."	2.27.7.2(a)			
4	For elevators with vertically sliding doors, the instructions (2.27.7.1) for returning the car to the recall level is permitted to include instructions for closing the door.	2.27.7.2(b)			

Acceptance Checklist for Emergency Power Systems on Automatic Elevators	Rev. 0

The purpose and intention of the checklist is to provide a focus for inspectors when completing acceptance testing of elevators equipped with Emergency Power.
Testing of the emergency power system shall as a **minimum** be simulated by implementing the following checklist.

Elevator Installation #: _____ Building _____
Address: _____
Date: _____ Inspected By: _____
Signature: _____
Number of elevators the EPS is capable of operating at a time: _____
Pass = meets requirements **Fail** = does not meet requirement **NA** = not applicable

		Pass	Fail	NA
1	The operation of the emergency power system (EPS) shall be tested during the inspection of the last elevator by providing an input from the emergency generator, to demonstrate compliance to section 2.27.2. This can be demonstrated either by: a) switching over to generator power or b) activating the input at the transfer switch (while on normal power) or c) simulating a switch over to EP by activating the input at the elevator controller.			
2	During the EPS Test, all elevators were returned to the recall level at least one at a time.(2.27.2.1)			
3	Verify an illuminated signal marked "ELEVATOR EMERGENCY POWER" indicating elevators on emergency power is located in the elevator lobby at the designated level. **(2.27.2.3)**			
4	**Note: When the emergency power system is not capable of operating all elevators simultaneously;** Verify selector switch(es) marked "ELEVATOR EMERGENCY POWER" (red lettering a minimum of 5 mm). (2.27.2.4.1)			
5	Verify operation by FEO- K1 key(2.27.8)			
6	Verify selector switch(es) corresponds to elevator identification number and includes an "AUTO " position." (2.27.2.4.2)			
7	Verify switch(es) is located at designated level, or if elsewhere, means is provided to indicate elevators are at the designated level and doors are open. (2.27.2.4.3)			
8	With the selector switch in the "AUTO" position: Verify automatic power selection returns each elevator not on designated attendant operation, inspection operation, or Phase II In-Car Emergency Operation. (2.27.2.4.4)			
9	Verify a disabled car automatically switches to another car. (2.27.2.4.4)			
10	Verify the individual selector switch(es) positions override automatic power selection and power is not removed until a car is stopped. (2.27.2.4.5)			

Notes:
1. The installing contractor is responsible to ensure compliance with design requirements identified in A17.1/CSA B44 Section 2.27.2 and specifically 2.27.2.1, (operation with rated load see 2.16.8(i) that specifies 125% of capacity be used) and 2.27.2.5 (regenerated power).
2. This checklist supersedes Item 1.17.3 of the A17.2 Guide for Inspection of Elevators & Escalators).